Made in Germany

www.lehner.eu

LEHNER®

Streuen & Dosieren mit 12 Volt

Drive
12 V

Spreading width
1–6 m

Fan
0-100% stepless

Hopper
Split in two
50/50 | 65/35

Control panel
VENTO II

230 l

500 l

AGRICULTURAL MACHINERY

VENTO® Duo

Pneumatic hose spreader with two-chamber system for simultaneously spreading large legumes and small seed crops over a width of up to 6 m.

SOWING FAR AND WIDE, OVER AND UNDER WITH THE VENTO® DUO

The VENTO® Duo is a pneumatic 12-V hose spreader with two-chamber system, which was developed for simultaneously spreading two types of seed at different sowing locations or soil depths. For example, in a single operation, large legumes can be sown directly into the soil while small seed crops are dispensed at a different depth and location. All functions and settings can be managed conveniently using the VENTO II control panel, and changed while you are on the move. Working widths from 1 – 6 m can be achieved, depending on the attached implement and hose routing.

VENTO® Duo – hits the target every time:

- 2x 12 V high-powered fan and separately controlled rotary feeder shafts
- Both hopper sizes are available with a 50/50 or 65/35 split
- Control panel with 3.3 inch graphic display
- Speed-dependent dosing and headland management system via 7-pin signal socket as standard
- Also included as standard:
  - 16 baffle plates with U-brackets for mounting
  - 2 rotary feeder shafts (2x 5.0 ml, blue/outlet) plus rotary feeder set
  - LEHNER Superflex hose (50 m)
  - 2 calibration bags and scale for calibration tests
  - Battery cable 6 mm² (6 m); control cable (6 m)
  - Transport and mounting frame

For further information visit: **www.lehner.eu**

VENTO® Duo

TECHNICAL DATA

Hopper capacity (litres)	**230 l**	**500 l**
Hose outlets	**16**	**16**
Dimensions (L x W x H) in mm	947 x 570 x 1199	1155 x 755 x 1472
No of fans/spreading width	2x / up to 6 m	2x / up to 6 m
Weight	109 kg	153 kg
Total power consumption	max. 45 A	max. 45 A
Motor power consumption	10 A	10 A
Operating/storage temperature	-10 to +50 °C	-10 to +50 °C
Battery cable/control cable	6 m / 6 m	6 m / 6 m

Hopper split

The hoppers of the VENTO® Duo are divided into two chambers (50/50 or 65/35 split). Each of the two chambers has its own empty indicator, agitator and load relief cover.

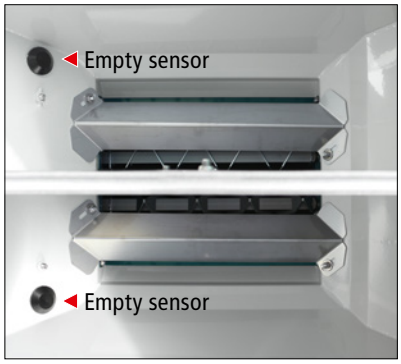

Empty indicator in split hopper (50/50)

Made in Germany

The VENTO II control panel with 3.3 inch graphic display leaves no wish unfulfilled.

All functions can be controlled centrally on the VENTO II. Control of all features – speed-dependent dosing, electric calibration, automated residue emptying – is completely simple, user-friendly and self-explanatory. Even the fan speed and rotary feeder shaft monitoring can be adjusted directly on the control panel. A choice of 20 languages and a program memory for up to 75 calibration tests make your work even more agreeable.

Tool-free handling

No tools are required to change rotary feeder shafts with various cells (A/B) for different spreading materials (fine, medium, large), or for attaching and detaching hoses.

The VENTO® Duo has two agitators

Using an optimum gear ratio, two separate agitators ① in the hopper keep the feed running through uniformly and gently.

Made in Germany

The VENTO® Duo comes as standard with:

Battery cable 6 mm² (6 m)

The VENTO® Duo is powered solely via the supplied 6 mm² battery cable. The battery cable is routed directly from the battery into the cab (holder included in delivery). The cable is protected by a plug-in fuse (40 A).

Rotary feeder shaft

The VENTO® Duo comes with two blue rotary feeder shafts 2x 5.0 ml and an additional rotary feeder set. This comprises green 2.5 ml cells, red 10.0 ml cells and dummy cells, so that mixtures of fine seeds and large legumes, small seed crops and micro granulate can be dispensed.

Baffle plate

The VENTO® Duo comes as standard with 16 baffle plates with U-brackets. The baffle plate can therefore easily be fixed to a square tube (40 x 40 mm). Square tube not included in delivery.

ACCESSORIES

For further information, go to **www.lehner.eu**

Y-splitter cable, 7-pin diode plug on 2x 7-pin diode socket.

Headland management system with hydraulic sensor and magnet for tractors without 7-pin signal socket.

AccoSat GPS receiver speed sensor using DGPS and a 3D accelerometer.

Wheel speed sensor, as an alternative in case the 7-pin signal socket cannot register the speed signal.

ISOBUS cable (3.5 m) for supplying power via the ISOBUS socket.

Extension cable with push-in connection: Length 3, 4 or 5 m (non-standard lengths on request).

Dummy plug for sealing individual hose outlets.

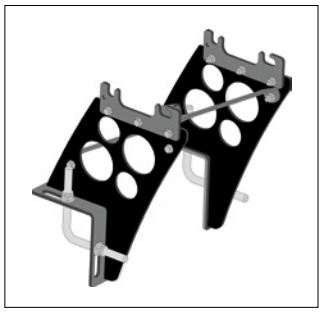

VENTO® universal bracket for 230 l hopper, for easy attachment to a square tube.

Subject to technical modifications © LEHNER Maschinenbau GmbH 10/2026

LEHNER®
Streuen & Dosieren mit 12 Volt

LEHNER Maschinenbau GmbH / Häuslesäcker 14 / D-89198 Westerstetten, Germany / Tel.: +49 (0)7348 9596-22
Fax: +49 (0)7348 9596-40 / e-mail: info@lehner.eu / www.lehner.eu