Made in Germany

www.lehner.eu

LEHNER®

Streuen & Dosieren mit 12 Volt

Drive
12 V

Reversing

Approved by: JKI

Examination according to JKI RiLi 3-1.0

Control panel
LAS 4 PSM

12 l

22 l

70 l

AGRICULTURAL MACHINERY

AgroDos®

The 12 V granulate spreader with the safest technology on the market for dispensing a great variety of granular materials during potato cultivation – officially tested and certified!

AgroDos® – 100 % THE RIGHT CHOICE!

The spreading of pesticides such as Goldor Bait is permitted only using officially tested and certified spreaders which, like the AgroDos®, satisfy the most stringent safety criteria. With star feeder lock for extremely precise granulate dosing down to the milligram, and patented reversing when switching off or pulling out, any unwanted trickling out of product is reliably prevented. In addition, the AgroDos® starts up only on the move and with the hydraulics lowered. What's more, the electronic lifting gear control is monitored to ensure that spreading stops automatically when pulling out, and the star feeder lock reverses 25°.

AMTLICH GEPRÜFT UND ANERKANNT
JKI Julius Kühn-Institut
Bundesforschungsinstitut für Kulturpflanzen

Test number: G1956

The AgroDos® leaves no wish unfulfilled:

- Certified by the German Federal Research Centre for Cultivated Plants (JKI) since February 2010
- Device control according to JKI RiLi 3-1.0 incl. test seal and test report
- Operation with 12 V electric motor
- Choice of hopper volume 12, 22, or 70 l
- Electric calibration and complete emptying as standard
- Control panel with 2-line graphic display for easy change of pesticide application rate and row spacing
- Application rate adjustment +/- 20 %
- The spreader is easy to attach and couple to the planter (electric or mechanical coupling)
- Manual or route-dependent operation possible
- Also included in delivery: 2x fishtail distributors, spiral 20 mm PVC hose (5 m), battery cable (5 m), control cable (4 m) and headland management cable (2.4 m)

For further information visit: **www.lehner.eu**

AgroDos®
TECHNICAL DATA

Hopper capacity (litres)	**12 l**	**22 l**	**70 l**
Dimensions (L x W x H) in mm	250 x 462 x 480	300 x 425 x 535	489 x 554 x 788
Weight	10 kg	11 kg	22 kg
Drive	Straight drive	Angled drive	
Operating voltage / speed range	12 to 15 V / 20 to 120 rpm		
Fuse/power consumption	25 A / 3 A		
Operating temp. / storage temp.	-10 to +70 °C / -30 to +70 °C		
Battery cable / control cable	5 m – 4.0 mm² / 4 m – fixed connection to spreader, cable to control panel		
Connections	Power supply, control cable, headland management socket		

Made in Germany

The dosed granulate is applied close to the ground via two hoses, using gravity feed.

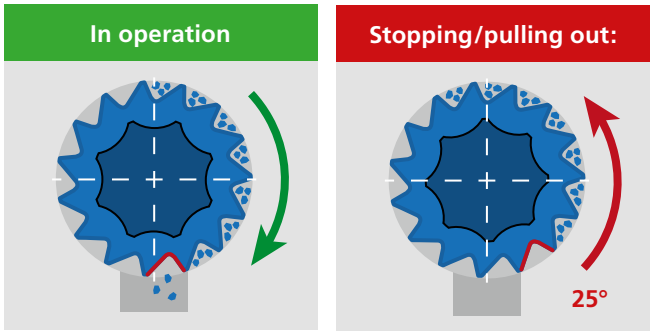

Reversing star feeder lock prevents additional material trickling out: The AgroDos® is equipped with patented auto-reverse from LEHNER; this reverses the star feeder lock 25° when the machine is stopped. This reliably prevents even the tiniest quantity of granulate from exiting when unintendedly. Should you ever forget to stop "manually", the electronic lifting gear control monitor transmits a signal to switch off when pulling out. Moreover, the AgroDos® is configured to ensure that it can start up when only on the move and with the hydraulics lowered.

LAS 4 PSM control panel for safe and reliable control of the AgroDos®

As well as setting the dosage by adjusting the speed of the star feeder lock, all other switching functions are also controlled via the control panel, e.g. On/Off, start/stop, setting the electronic lifting gear control signal, automated residue emptying, electric calibration and setting up of your own products (spreading charts). A choice of five languages and a program memory for up to 12 calibration tests rationalise your work even more. Speed-dependent dosing via a 7-pin signal socket or wheel speed sensor is also possible (accessories).

Made in Germany

The type of coupling is relevant in practice and when ordering

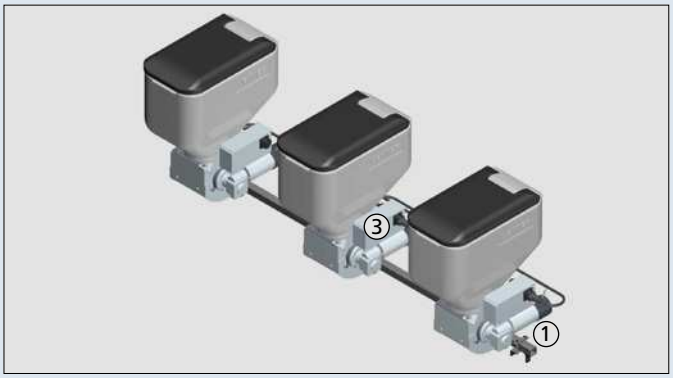

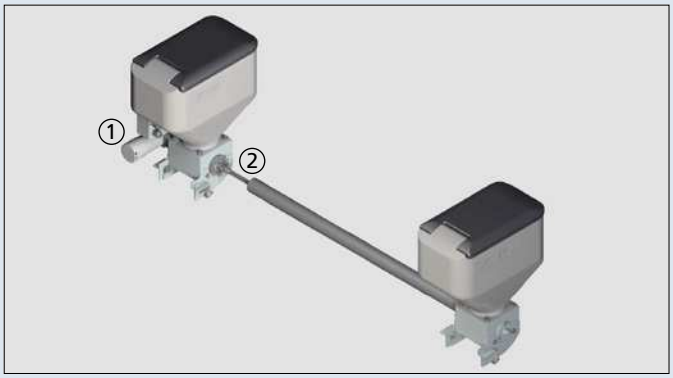

Electric version

With the electric coupling, all spreaders are equipped with a gear motor ①. To add a spreader, simply plug its cable into the multi-pin socket ③ of the spreader that's already attached – and you're ready to go! This very simple coupling is therefore used more frequently than the mechanical version.

Mechanical version

With a mechanical coupling, only the first spreader has a gear motor ① installed; this drives the additional spreaders via a cardan shaft ②. However, when attaching the AgroDos® spreader to the planter, you must make sure that all granulate spreaders are parallel with one another.

ACCESSORIES:

You can find further information on AgroDos® accessories at **www.lehner.eu**

Wheel speed sensor, as an alternative in case the 7-pin signal socket cannot register the speed signal.

Headland management 7-pin signal socket – (1x headland management cable included in delivery)

Headland management system with hydraulic sensor and magnet for tractors without 7-pin headland management signal socket.

Headland management system with snap switch for tractors with hydraulics but without a 7-pin signal socket.

Y-splitter cable, 7-pin diode plug on 2x 7-pin diode socket.

Extension cable with push-in connection: Length 3, 4 or 5 m (non-standard lengths on request).

Various star feeders for the AgroDos® spreader (on request).

Battery cable with holder (1x as standard) – if the carrier vehicle requires another 12 V supply.

Subject to technical modifications © LEHNER Maschinenbau GmbH 03/2023

LEHNER®
Streuen & Dosieren mit 12 Volt

LEHNER Maschinenbau GmbH / Häuslesäcker 14 / D-89198 Westerstetten, Germany / Tel.: +49 (0)7348 9596-22
Fax: +49 (0)7348 9596-40 / e-mail: info@lehner.eu / www.lehner.eu